TREX700N METAL BEARING BLOCK UPGRADE
AT700N-MBB (AL 6061-T6)

ITEM NO.	DESCRIPTION	QTY.
1	T700N METAL BEARING BLOCK UPGRADE	2
2	THRUST BEARING RACE 23MM	4
3	THRUST BEARING BALL CONTAINER 23MM	2
4	THRUST BEARING SPACER 12x16x1MM	2
5	RADIAL BALL BEARING 6901ZZ	2

***NOTE**: THE METAL BEARING BLOCKS HAVE BEEN CNC MACHINED TO PRECISE TOLERANCES FOR THE BEARINGS. WHEN INSERTING THE RADIAL BEARINGS, ALIGN THE BEARING TO THE BORE ACCURATELY AND THEN PRESS IN BY HAND. IF A PRESS-FIT IS REQUIRED, BE CAREFUL TO ONLY APPLY PRESSURE TO THE OUTER-EDGE OF THE BEARING TO PREVENT DAMAGE TO THE INTERNAL COMPONENTS.*

DO NOT PUSH ON THE INNER, ROTATING RACE OF THE BEARING DURING INSTALLATION.

THE RADIAL BEARING IS DESIGNED TO FLOAT VERTICALLY IN THE BEARING BLOCKS, WHICH ALLOWS ALL AXIAL FORCES TO BE TRANSFERED TO THE THRUST BEARINGS. LOCTITE IS NOT REQUIRED FOR PROPER OPERATION AND ANY RADIAL LOAD WILL LOCK THE OUTER RACE OF THE RADIAL BEARING AGAINST THE HOUSING DURING FLIGHT.

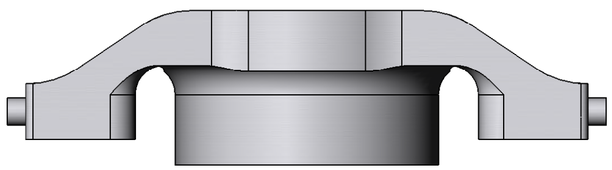

UPPER METAL BEARING BLOCK

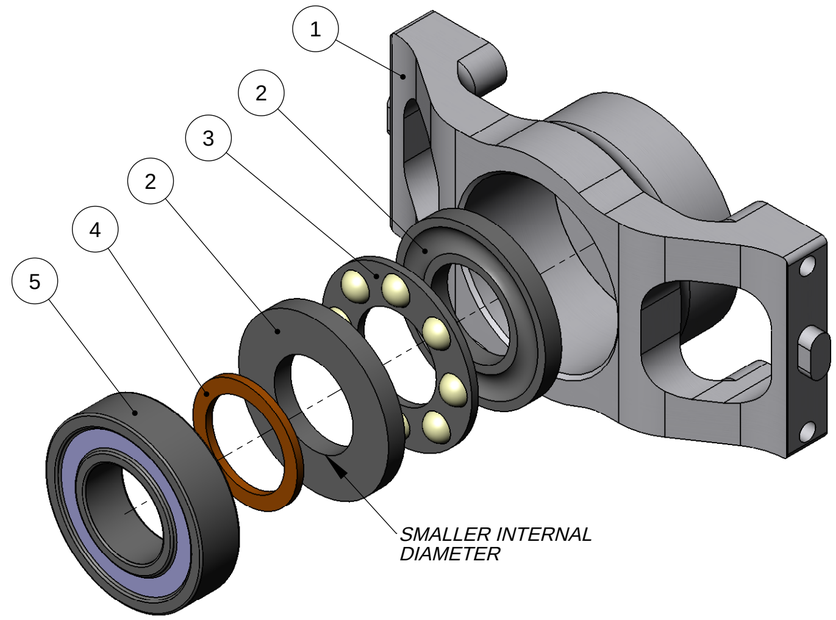

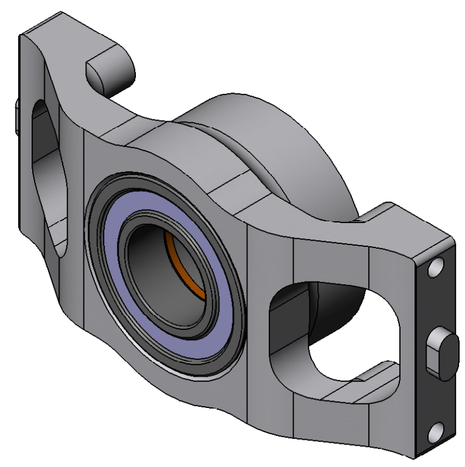

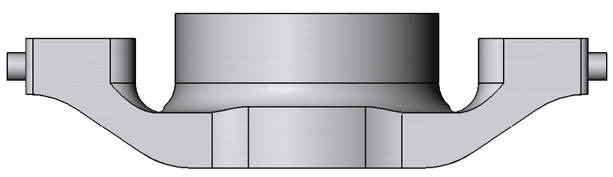

LOWER METAL BEARING BLOCK

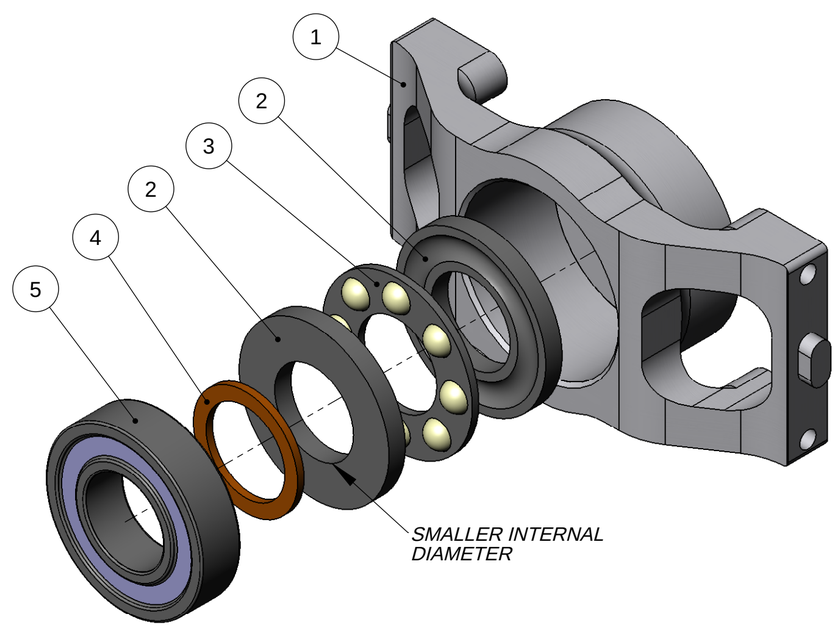

www.KDEDirect.com

www.KDEDirect.com
AT700N-MBB