TREX600 BOTTOM BRACKET UPGRADE
AT600-BBU (AL 6061-T6)

ITEM ID	DESCRIPTION	QTY.
1	M3 x 0.5 x 10MM SOCKET HEAD CAP SCREW ALLOY STEEL	4
2	M3 x 0.5 x 12MM SOCKET HEAD CAP SCREW ALLOY STEEL	2
3	M3 x 0.5 x 16MM SOCKET HEAD CAP SCREW ALLOY STEEL	4
6	ALIGN M3 SPECIALTY WASHER (PROVIDED IN ORIGINAL KIT)	4
4	ALIGN M3 FLAT WASHER (PROVIDED IN ORIGINAL KIT)	6
5	M3 X 0.5 NYLON LOCKNUT ZP STEEL	4

***NOTE**: DUE TO TOLERANCE CONTROL OF THE STOCK FRAMES, LIGHT SANDING OF THE FRAME OR DRILLING OF THE FRAME HOLE LOCATIONS MAY BE NECESSARY TO PROVIDE ACCURATE ALIGNMENT.*

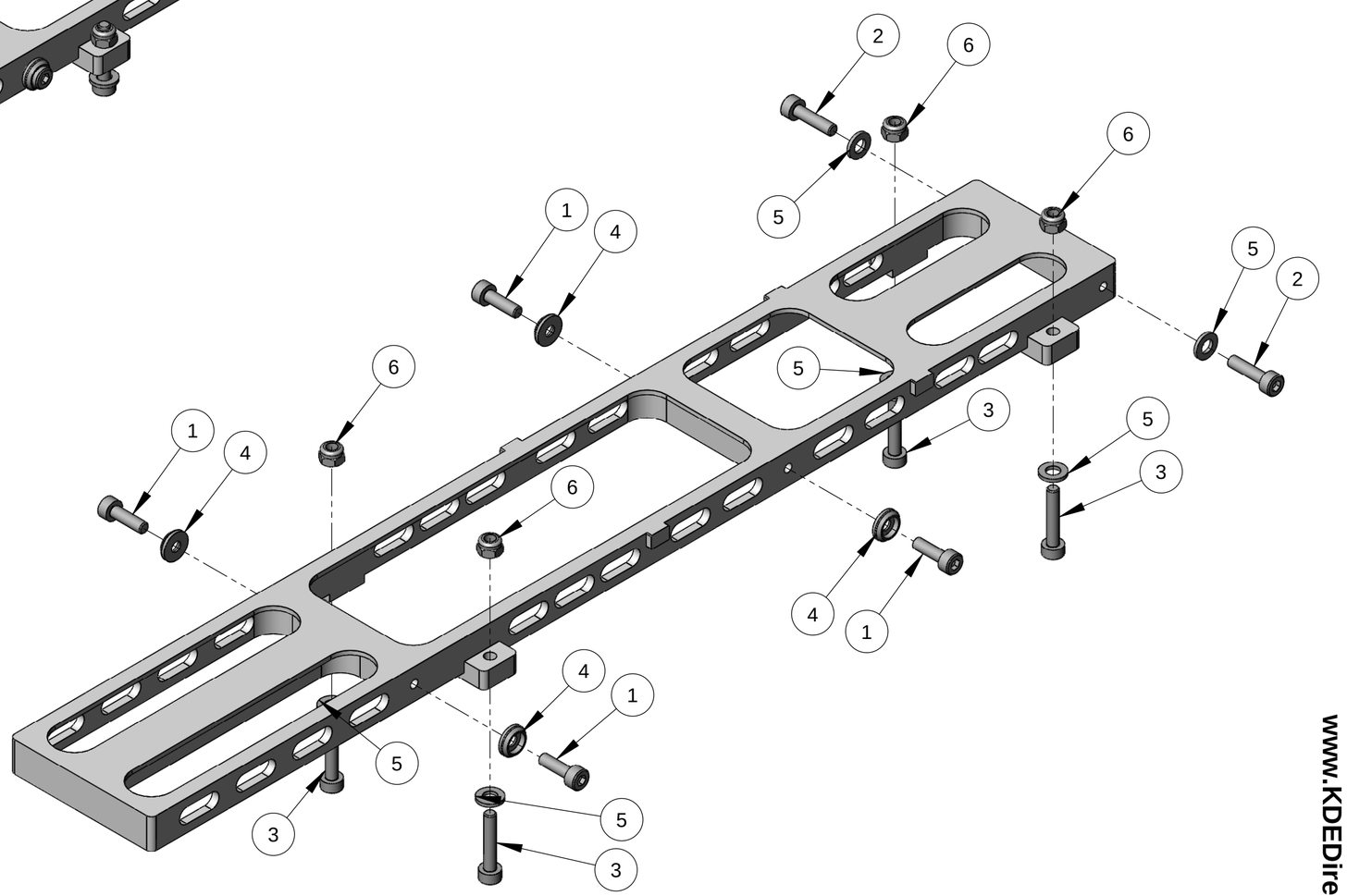

www.KDEDirect.com

www.KDEDirect.com
AT600-BBU