TREX450 BOTTOM BRACKET UPGRADE
AT450-BBU (AL 6061-T6)

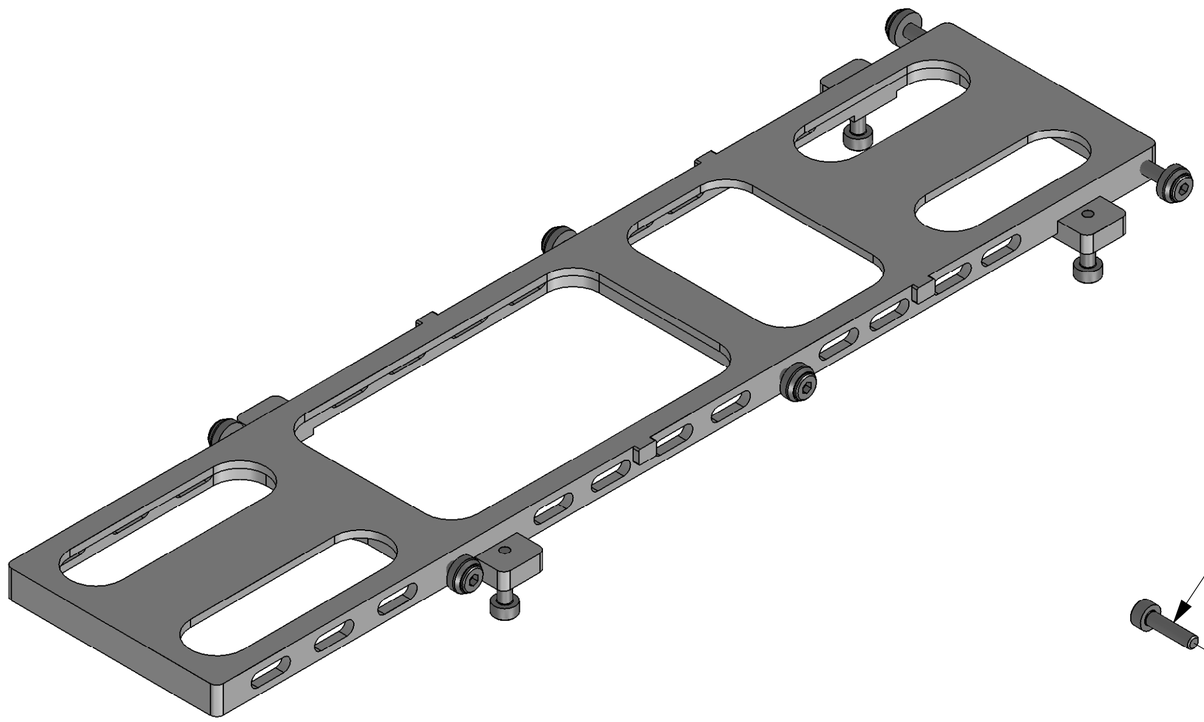

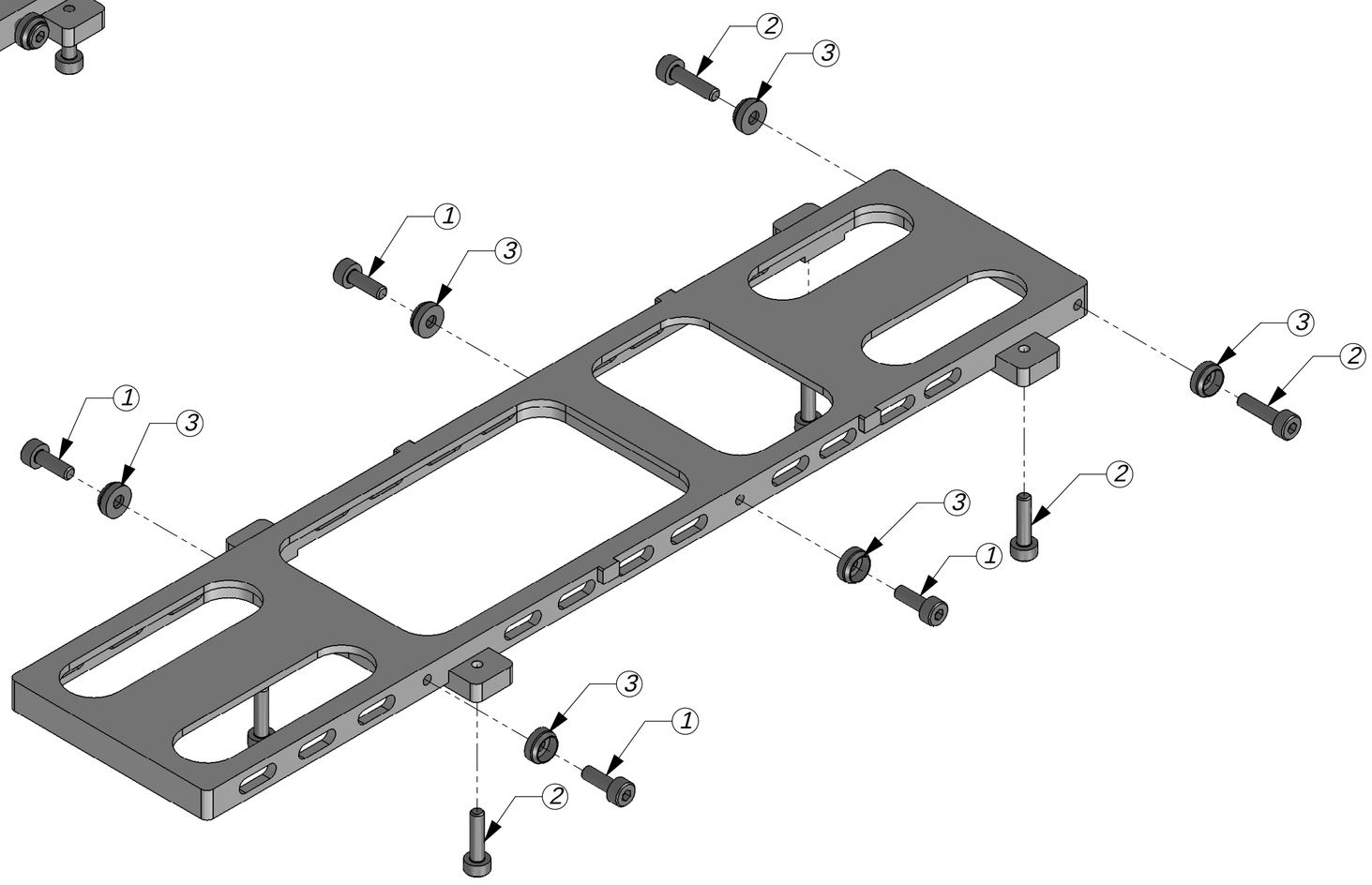

ITEM NO.	DESCRIPTION	QTY.
2	M2 x 0.4 x 6MM SOCKET HEAD CAP SCREW STAINLESS STEEL	4
1	M2 x 0.4 x 8MM SOCKET HEAD CAP SCREW STAINLESS STEEL	6
3	ALIGN M2 SPECIALTY WASHER (PROVIDED IN ORIGINAL KIT)	6

***NOTE**: DUE TO TOLERANCE CONTROL OF THE STOCK FRAMES, LIGHT SANDING OF THE FRAME OR DRILLING OF THE FRAME HOLE LOCATIONS MAY BE NECESSARY TO PROVIDE ACCURATE ALIGNMENT.*

www.KDEDirect.com

www.KDEDirect.com
AT450-BBU