TREX250 BOTTOM BRACKET UPGRADE
AT250-BBU (AL 6061-T6)

ITEM NO.	DESCRIPTION	QTY.
1	#0-80 x 3MM BUTTON HEAD SOCKET HEAD CAP SCREW ALLOY STEEL	4
2	#0-80 x 6MM BUTTON HEAD SOCKET HEAD CAP SCREW ALLOY STEEL	6

***NOTE**: DUE TO TOLERANCE CONTROL OF THE STOCK FRAMES, LIGHT SANDING OF THE FRAME OR DRILLING OF THE FRAME HOLE LOCATIONS MAY BE NECESSARY TO PROVIDE ACCURATE ALIGNMENT.*

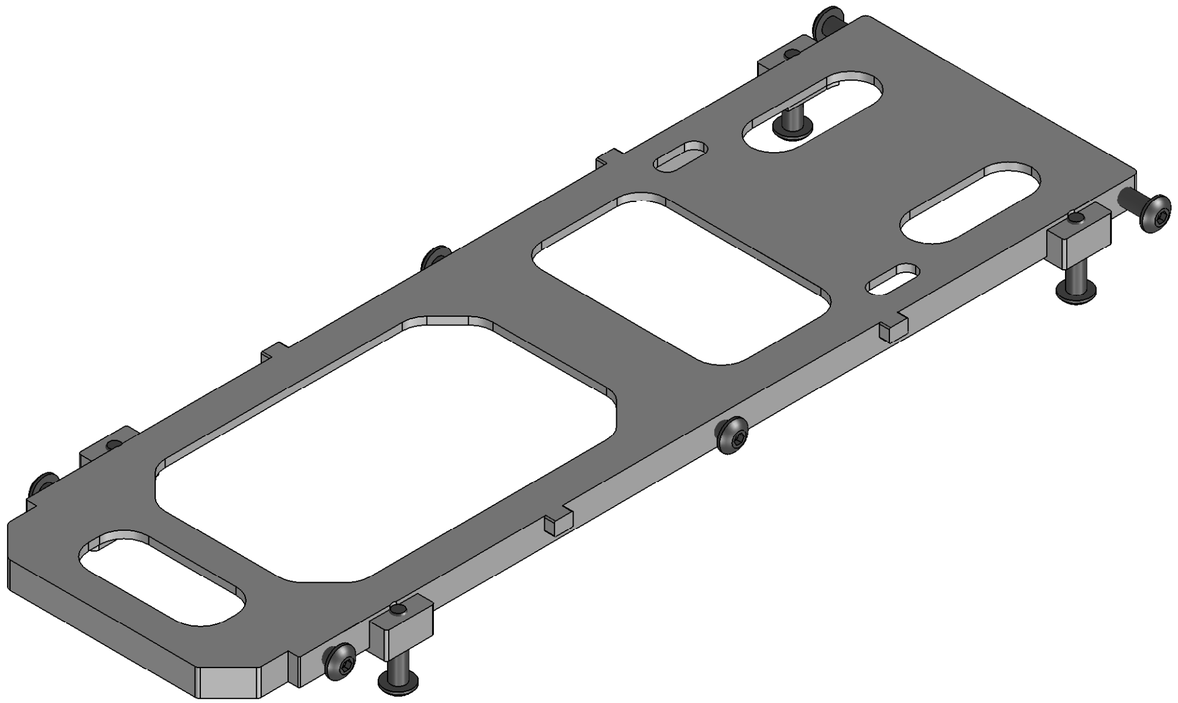

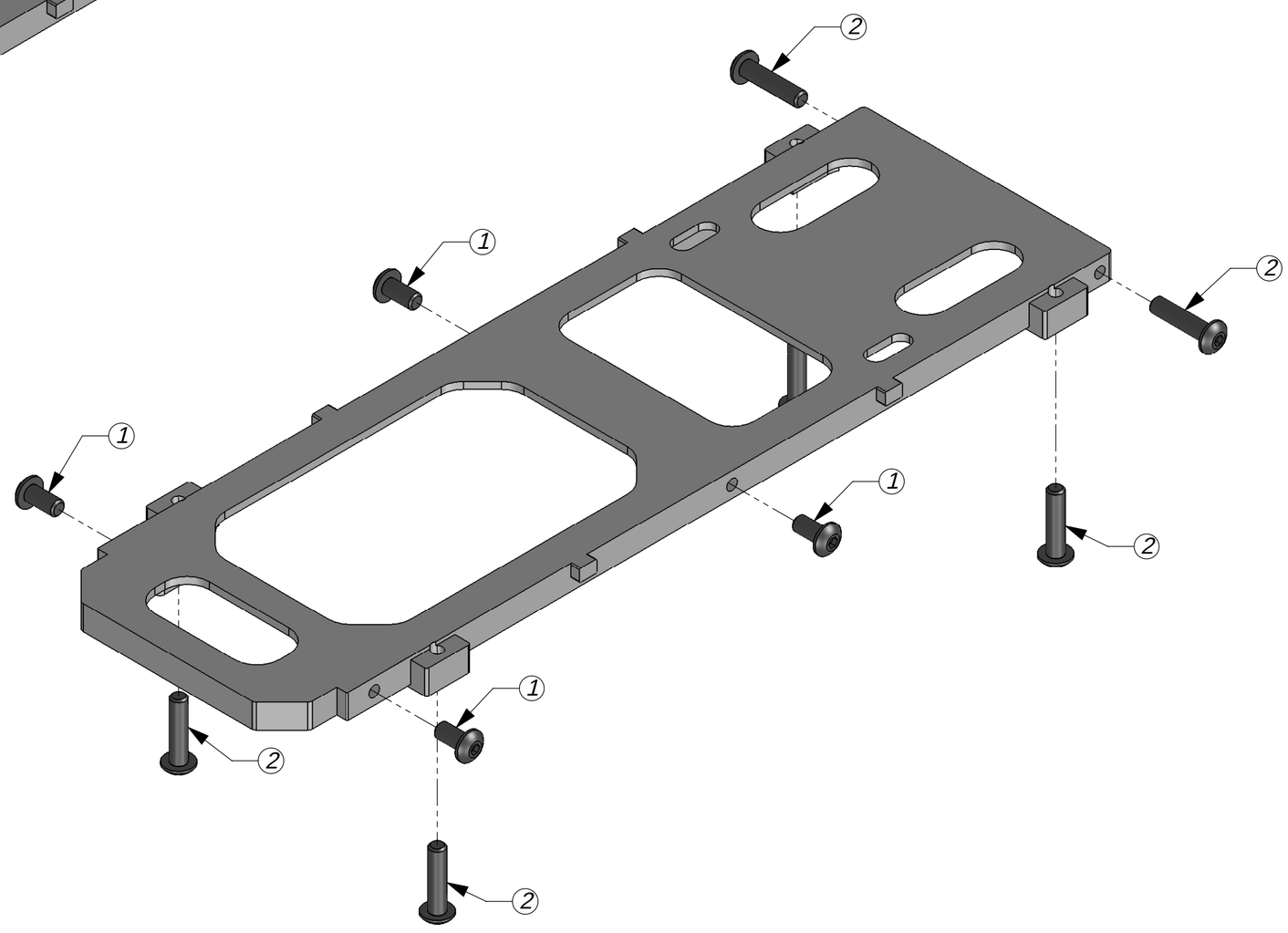

www.KDEDirect.com

www.KDEDirect.com
AT250-BBU